International Conference on Space Optics—ICSO 2018

Chania, Greece

9–12 October 2018

Edited by Zoran Sodnik, Nikos Karafolas, and Bruno Cugny

Stable and high power 515-nm lasers for the space gravitational wave detector: DECIGO

Aru Suemasa

Ayumi Shimo-oku

Shunsuke Ohtsuka

Masaki Nakamori

et al.

International Conference on Space Optics — ICSO 2018, edited by Zoran Sodnik, Nikos Karafolas, Bruno Cugny, Proc. of SPIE Vol. 11180, 111800V · © 2018 ESA and CNES · CCC code: 0277-786X/18/$18 · doi: 10.1117/12.2535950

Stable and high power 515-nm lasers for the space gravitational wave detector: DECIGO

Aru Suemasa*, Ayumi Snimo-oku, Shunsuke Ohtsuka, Masaki Nakamori, Mitsuru Musha
Institute for Laser Science, University of Electro-communications
1-5-1 Chofugaoka, Chofu-shi, Tokyo, 182-8585, Japan

ABSTRACT

We have developed the frequency-stabilized lasers for gravitational wave detector DECIGO, whose short-term and long-term frequency stability is required to be $df/f=10^{-15}$ level with the high output power of 10 W. The short- and long-term frequency stability is realized by using frequency reference of an iodine absorption signal at 515 nm. We made two Breadboard models to evaluate the frequency stability of the laser. The short-term frequency stability is improved to 30 Hz/√Hz at 1 Hz by suppressing the intensity noise of the laser at modulation frequency of 200 kHz, and long-term frequency stability also improved by suppressing residual amplitude modulation (RAM). For increasing the output power with keeping its frequency stability, a 2-stage cascade fiber amplifier has been developed. In the current presentation, we report the status of our frequency stabilized lasers and the schematic of its higher power unit.

Keywords: gravitational wave, frequency stabilization, intensity stabilization, and coherent addition

1. INTRODUCTION

Since the direct detection of the gravitational wave (GW) by Advanced LIGO group in 2015 [1], the GW astronomy has been started. GW is very small temporal variation of space distortion. The sources of GW are the change of enormous mass such as inspiral and merger of black hole binaries, explosion of supernovae, which can be detected by ground-based Michelson interferometers such as Advanced Virgo [2] or KAGRA [3]. At lower frequency range below 10 Hz, many attractive GW sources stay such as background GW generated from early universe, where ground-based detectors cannot detect because of the seismic noise from the ground or their finite arm length. In order to detect lower frequency GW, the space GW detector named DECIGO has been promoted [4]. DECIGO is Japanese space GW detector named after DECi-heltz Interferometer Gravitational wave Observatory, which is a triangle-shaped laser interferometer with 1000-km separation. Before launching DECIGO in 2030s, the milestorne mission named B-DECIGO has also been planed, whose arm length is 100 km [5]. For the light source of DECIGO and B-DECIGO, high frequency stability, intensity stability and high power are required. The requirements of our light source for DECIGO and B-DECIGO are listed in Table 1.

Table 1 Requirements of the light source for DECIGO/B-DECIGO

project	wavelength [nm]	power [W]	frequency noise [Hz/√Hz]@1Hz	Relative intensity noise [/√Hz]@1 Hz
B-DECIGO	515	2	1	1×10^{-8}
DECIGO	515	10	1	1×10^{-8}

*email: a_suemasa@ils.uec.ac.jp

2. FREQEUNCY STABILIZATION

2.1 Iodine-stabilized laser

We have developed 2 breadboard models of the frequency-stabilized laser named BBM1 and BBM2. The schematic of BBM1 and BBM2 is shown in Fig 1 [6].

In BBM1, The light source is an Yb doped fiber DFB laser (The Koheras BasiK™ Y10), whose wavelength is 1030 nm, the output power is 20 mW, and the linewidth is less than 80 kHz. The output power of the Yb-fiber DFB laser is amplified by a home made Yb-doped fiber amplifier (YDFA) up to 200 mW. The amplified 1030-nm output power is converted into 515-nm green light by using an waveguide periodically-polled lithium niobate crystal (WG-PPLN) whose conversion efficiency is 26 %. The green light is introduced into the signal acquisition part on the breadboard and is divided into P-polarized light (signal beam) and S-polarized light (pump beam). The divided ratio of signal: pump is 2:7 which is adjusted by a half wave plate in front of PBS. The pump beam is phase-modulated at 200 kHz, and the signal beam is frequency-shifted by an acousto-optic modulator (AOM) at 80 MHz, which are introduced into a 40-cm iodine-filled reference cell in counter-propagated with 3 fold configuration. The total interaction length of 120 cm is obtained for signal acquisition. The phase modulation in the pump beam is transfer to the signal, which is detected by a photo detector, and is demodulated at 200 kHz to obtain an offset-free-frequency-discrimination-signal. The frequency of laser is stabilized to I_2 absorption signal, and the error signal is filtered into control signal by a servo filter, is fedback to the PZT-driven frequency actuator of the fiber DFB laser. In the frequency-stabilized state, the short-term frequency noise is limited by signal-to-noise ratio (SNR) of the iodine absorption signal, which can be improved by suppressing the intensity noise of the laser at the modulation frequency of 200 kHz. We try to suppress the intensity noise at 200 kHz by the active feedback and feedforward control scheme using an AOM as the intensity actuator (described below), and also by the passive noise cancellation by the auto-balanced detection. The long-term frequency stability is limited by residual amplitude modulation (RAM), and is improved by the temperature control applied to EOM for decreasing RAM effect. The frequency noise of our two BBMs are evaluated from the beat note between them. The Allan deviation of the fractional frequency uncertainty of the beat note is $df/f=10^{-13}$ level at 1s, and reaches $df/f=10^{-14}$ level at 1000s. The frequency noise spectrum of the beat noise is also evaluated to be 30 Hz/√Hz at 1 Hz.

As the light source of iodine-stabilized laser, we have now developed two homemade external cavity laser diodes (ECLDs) whose linewidth is less than 100 kHz evaluated from beat note between fiber DFB laser and ECLD. Since the intensity noise of ECLD at 200 kHz is lower than that of fiber DFB laser, the SNR of iodine absorption signal would be improved and hence the short-term stability is also improved. Therefore the light sources of BBMs will be replaced with these ECLDs.

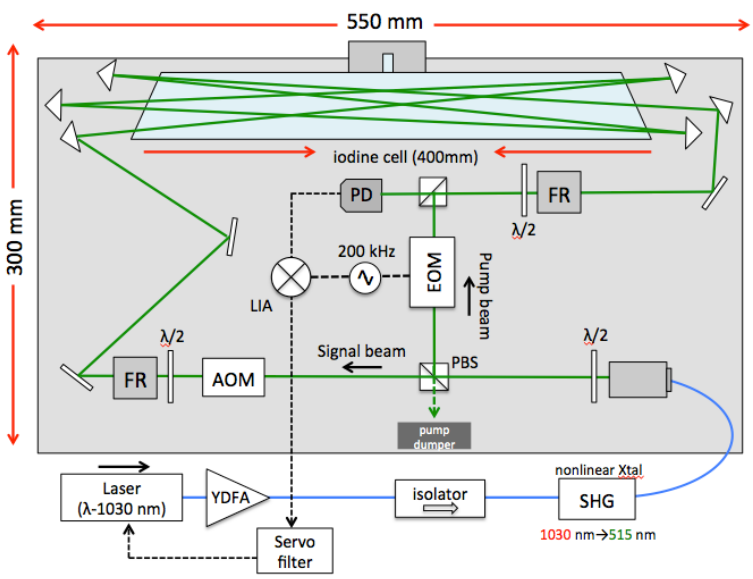

Fig 1. The schematic diagram of BBMs

1.2 The intensity-stabilization at modulation frequency (200 kHz)

Since the short-term frequency stability of laser is limited by SNR of frequency reference, the intensity noise at modulation frequency (200 kHz) of laser should be suppressed. In order to suppress the intensity noise at 200 kHz, we tried intensity stabilization by an active feedback loop whose intensity actuator is AOM, which is reported in previous conference (ICSO2016) [6]. In addition to the active feedback control, we try intensity stabilization by active feed forward method whose intensity actuator is also an AOM. The schematic diagram of our intensity stabilization at 200 kHz is shown in Fig 2.

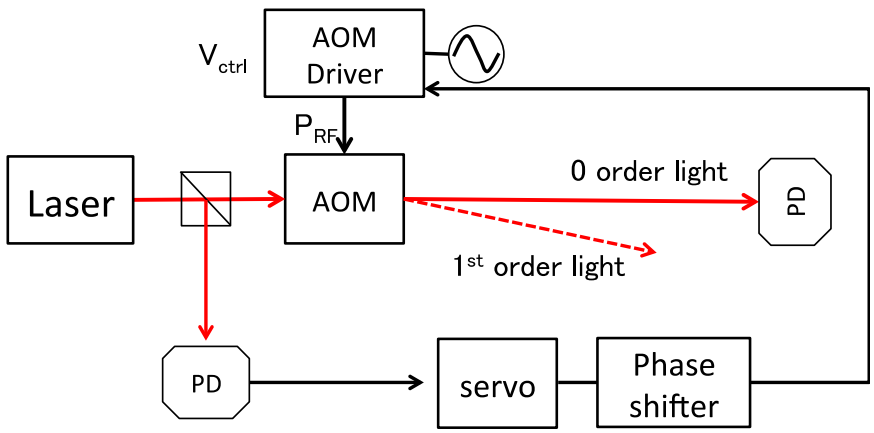

Fig.2 Schematic diagram of active feed forward

In BBMs, the AOM is inserted into the signal beam, and the 1st order diffraction light from the AOM is introduced into the I_2-cell in order to avoid an interference effect between the pump beam and the signal beam. For intensity stabilization at 200 kHz, the 0th order light is picked off by non-polarized beam splitter (NBS) and detected by a PD. The detected light is converted into voltage signal and filtered by high pass filter (HPF) and servo circuit, and the phase of the signal is adjusted by a phase shifter. After phase-shifted, the voltage signal is applied to the amplitude modulation terminal of the AOM driver. By optimizing the phase and intensity of feedforward signal, narrow band intensity suppression around 200 kHz is successfully suppressed down by13 dB.

3. INCREASING THE OUTPUT POWER

In order to increase the output power of our iodine-stabilized laser at 515 nm with keeping its frequency stability, we now have developed a cascaded power amplifier for B-DECIGO whose required power is 2 W. The configuration of the cascaded power amplifier is shown in Fig 3.

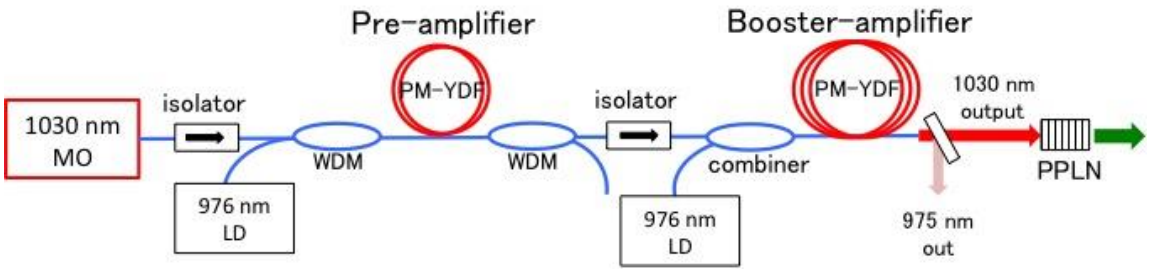

Fig.3 Schematic diagram of the cascaded amplifier

The pre-amplifier is an Yb-doped fiber amplifier (YDFA) which consists of an optical isolators, the pump LD (976 nm), WDMs, and Yb-doped fiber. The length of Yb-fiber is 1.5 m, and the diameter of core and clad are 5.5 um and 125 um, respectively. The 1st stage pre-amplifier YDFA is core-pumped from forward with 700 mW of pump LD, and the maximum power of 420 mW and slop efficiency is 60 % are obtained. The 2nd stage booster YDFA consists of a double-clad Yb-doped fiber, and pump light from the LDs with the wavelength of 976 nm are introduced to the clad of the fiber through a three-port fiber combiner. The length of fiber is 3 m, and the diameter of the core and the clad are 10 μm and 125 μm, respectively. From this configuration, 10 W of the 1030 nm light will be obtained, and a bulk PPLN crystal will generate 2 W of 515 nm light from these amplified IR light for B-DECIGO. Such fiber MOPA (Master Oscillator and fiber Power Amplifier) is a compact, high efficient and robust system which is suitable for spaceborne light source. The frequency noise of the MOPA is dominated by master laser. On the other hand, the intensity noise of the MOPA is dominated from the that for the pump LD and the fluctuations of fiber itself, and further intensity stabilization is necessary for the light source of B-DECIGO.

4. CONCLUSIONS AND FUTURE PROSPECTS

We have developed the frequency-stabilized spaceborn lasers at 515 nm for Japanese space gravitational wave detector DECIGO whose frequency is stabilized in reference to the iodine-saturated absorption. In order to improve the absolute frequency stability of the lasers at 1 Hz, we suppress the intensity noise of the laser down to 10^{-8} /√Hz at 200 kHz, and obtain high SNR of the frequency reference by the combination of the balanced detection and intensity stabilization at 200 kHz. The short-term frequency noise at 1 Hz is 30 Hz/√Hz, and the long-term fractional frequency uncertainty reaches 10^{-14} levels at longer than the average time of 1000s. In order to improve the long-term frequency stability, the active control of DC voltage will apply to EOM for further suppressing RAM effect. And for increasing the out power of the laser, we are also planning to obtain 10-W of green light by combination of high-power Yb-doped fiber amplifiers and the coherent power combining with keeping the frequency and intensity stability of the master laser.

ACKNOWLDGEMENT

This research is supported by the Japan Aerospace Exploration Agency (JAXA), and by the Japan Society for the Promotion of Science (JSPS), Grand-in-Aid for Scientific Research (KAKENHI)15H02082, Grand-in-Aid for Research Fellowship for Young Scientists 16J09106 .

REFERENCES

[1] Abbott, B.P et al, "Observation of gravitational waves from a binary black hole merger," Phys.Rev.Lett. 116, 061102 (2016).
[2] F.Acernese, F., Amico, P., Alshourbagy, M. et.al.,"The Virgo 3 km interferometer for gravitational wave detection," J. Opt. A, 10, 064009 (2008).
[3] Kuroda, K., et.al. "The status of LCGT," Class. Quantum. Grav., 23, S215-S221 (2006).
[4] Seto, N., Kawamura, S., Nakamura, T."Possibility of direct measurement of the acceleration of the universe using laser interferometer gravitational wave antenna in space," Phys. Rev. Lett., 87, 221103 (2001).
[5] Nakamura, T. et.al. "Pre-DECIGO can get the smoking gun to decide the astrophysical or cosmological origin of GW150914-like binary black holes," Prog. Theory Exp. Phys. 2016, 093E01 (2016).
[6] Suemasa, A., Shimo-oku, A, Nakagawa, K., Musha, M., "Developments of high frequency and intensity stabilized lasers for space gravitational wave detector DECIGO/B-DECIGO," CEAS Space J. 9, 985 (2017).